Profile

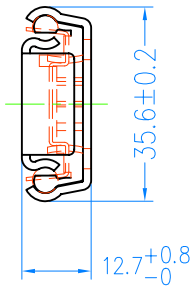

t=1.5mm

Instruction

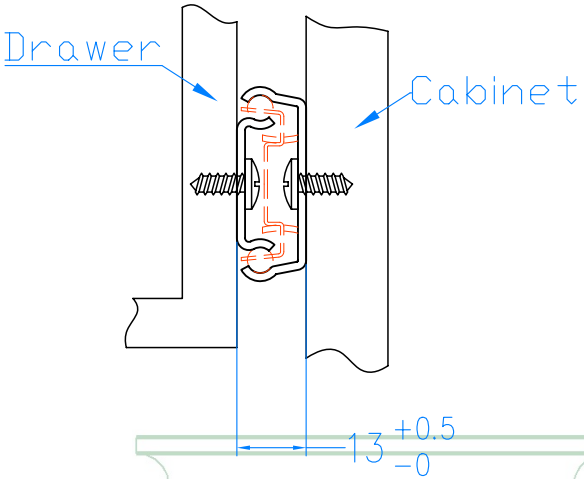
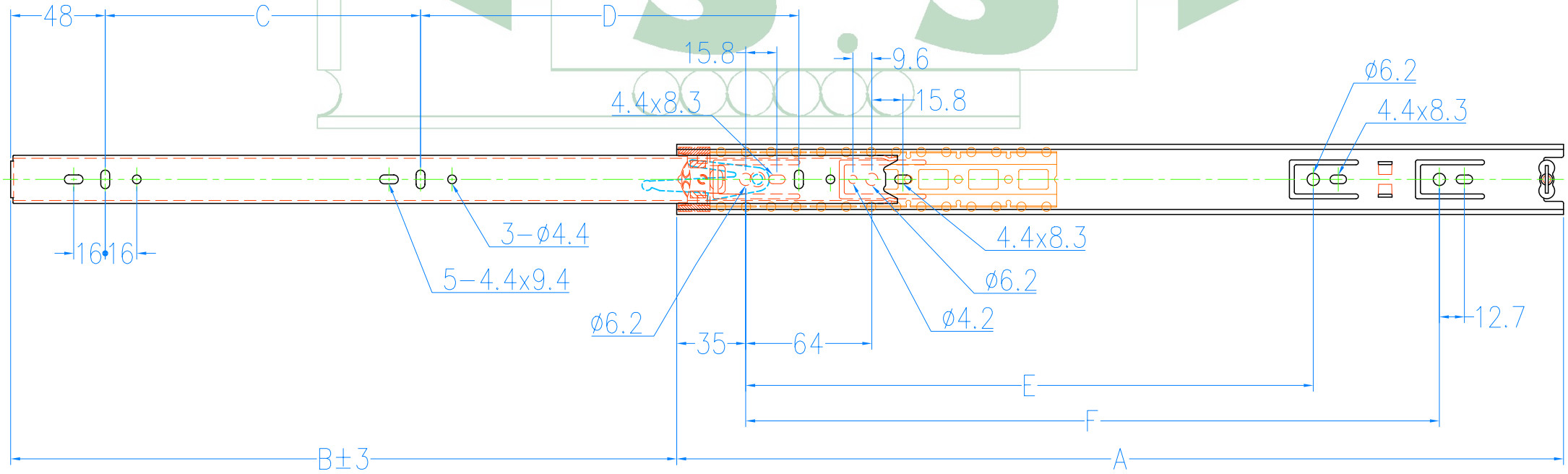
Item No.	Slide Length A(mm)	Slide Travel B±3(mm)	C(mm)	D(mm)	E(mm)	F(mm)
2136T-12	300	215	128	96	224	–
2136T-14	350	245	96	160	256	–
2136T-16	400	300	128	192	320	–
2136T-18	450	338	160	192	288	352
2136T-20	500	375	192	224	288	416
2136T-22	550	413	192	256	288	416
2136T-24	600	450	224	288	320	480
2136T-26	650	488	256	288	352	544